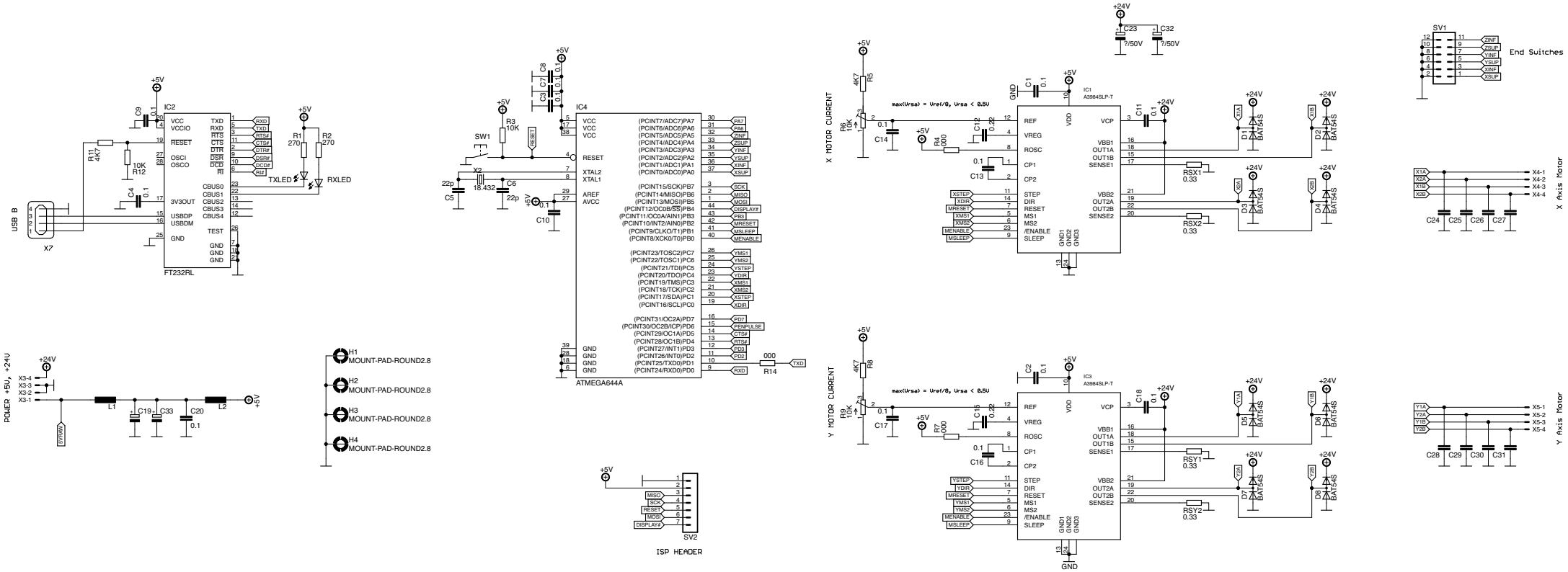

Motöri Controller

(C) 2009 Viacheslav Slavinsky svofski@gmail.com

http://sensi.org/~svo

Revision B (July 28, 2009)

1. Fixed swapped TxD and RxD
2. ULN2803 properly used as a low-side key